Hongda Capacitors®
Email: sales@hongdacap.com.hk
Skype: Hongdacapacitors
Web: www.hongdacap.com.hk
Tel: +86 (0)769 82207248

HVS Series 85°C V- chip SMD Aluminum Electrolytic Capacitor

Operating with general temperature range
-40~+85°C Load life of 2000 hours
RoHS & REACH compliant, Halogen-free

How to order

HVS	477	M	0004	0607	R	-
↓	↓	↓	↓	↓	↓	↓
Type	Capacitance code	Tolerance	Rated Voltage	Size Code	Package	Additional characters may be added for special requirements
HVS	pF Code: 1st two digits represent significant figures 3rd digit represents mulitplier (number of zeros to follow) 477 = 470uF 107 = 100uF	M: +/-20%	Code 0035: 35VDC For DC Voltage 0004: 4 VDC 0035: 35VDC 0450: 450VDC	Code 0405: Size 4x5.4mm Size for V-chip E-cap 0607: Size 6.3x7.7mm 1010: Size 10x10.5mm 1818: Size 18x18.5mm	R: Tape & Reel	

Frame drawing

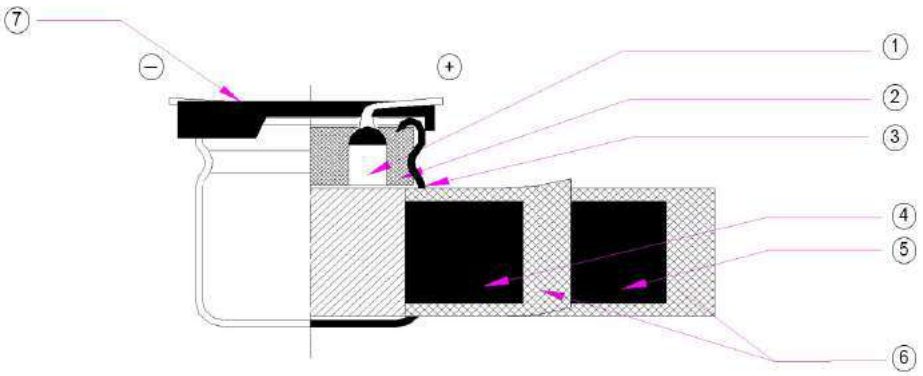

No.	Parts	Material
1	Lead wire	AL- wire LG3+Tin- plating of copper cover steel
2	Rubber stopper	IIR rubber
3	PE- CASE	AL –99.5%
4	AL – foil(+)	Formed AL 99.98% or 99.98%
5	AL – foil(-)	Etched AL 99.7%
6	Separstor paper	Electrolytic Capacitor paper
7	BASE	PPS

Case size table

1. φ4~φ6.3

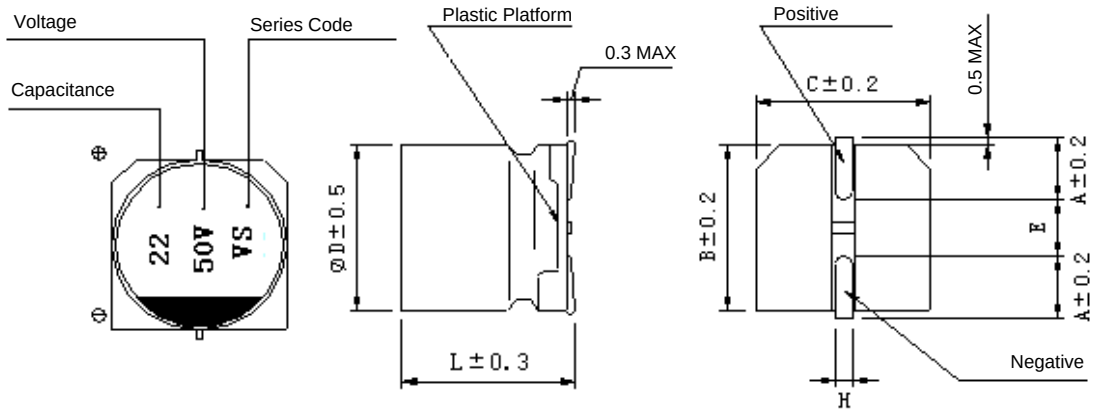

2. φ8~φ18

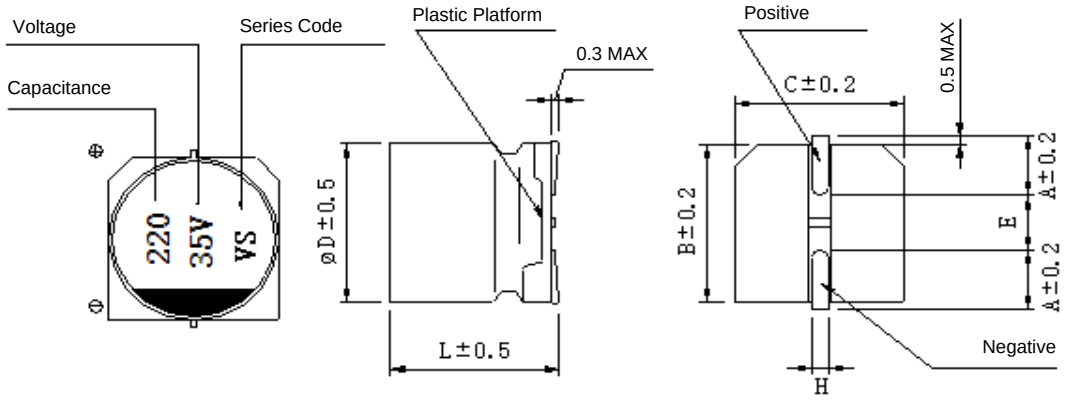

unit:(mm)

	4 × 5.4	5 × 5.4	6.3 × 5.4	6.3 × 7.7	6.3 × 10.5	8 × 10.5	8 × 12.5	10 × 10.5	10 × 12.5	12 .5× 13.5	12.5 × 16.5	16 × 16.5	18 × 16.5	18 × 21.5
A	1.8	2.1	2.4	2.4	2.4	2.9	2.9	3.2	3.2	4.8	4.8	5.8	6.8	6.8
B	4.3	5.3	6.6	6.6	6.6	8.3	8.3	10.3	10.3	13	13	17	19	19
C	4.3	5.3	6.6	6.6	6.6	8.3	8.3	10.3	10.3	13	13	17	19	19
E	1.0	1.3	2.2	2.2	2.2	3.1	3.1	4.5	4.5	4.4	4.4	6.4	6.4	6.4
L	5.4	5.4	5.4	7.7	10.5	10.5	12.5	10.5	12.5	13.5	16.5	16.5	16.5	21.5
H	0.5~0.8					0.8 ~ 1.1				1.1~1.4				

Specifications

Items	Characteristics
Operating Temperature Range	-40℃ ~ 85℃
Rated Voltage Range	4V ~400V
Nominal Capacitance Range	0.1 ~ 10000 μF
Nominal Capacitance Tolerance	±20%（20℃，120Hz）
Leakage Current	I≤0.01CRVR or 3(μA)) Whichever is greater , After 2 minutes' application of rated voltage. CR: Nominal Capacitance (μF) UR: Rated voltages (V)

（tgδ）

Dissipation Factor (Max)
20℃, 120Hz

UR (V)	4	6.3	10	16	25	35	50
tgδ	0.35	0.28	0.24	0.20	0.16	0.14	0.12

When nominal capacitance exceeds 1000uF,add 0.02 to the value above for each 1000uF increase.

Hongda Capacitors®
Email: sales@hongdacap.com.hk Web: www.hongdacap.com.hk
Skype: Hongdacapacitors Tel: +86 (0)769 82207248

Nominal capacitance, rated voltage, rated ripple current and case size table

V / uF	4		6.3		10		16		25		35		50	
	D×L mm	I~ mA	D×L mm	I~ mA	D×L mm	I~ mA	D×L mm	I~ mA	D×L mm	I~ mA	D×L mm	I~ mA	D×L mm	I~ mA
0.1													4×5.4	3.2
0.22													4×5.4	4.7
0.33													4×5.4	5.7
0.47													4×5.4	6.8
1.0													4×5.4	10
2.2									4×5.4	16	4×5.4	16	4×5.4	15
3.3									4×5.4	18	4×5.4	18	4×5.4	18
4.7									4×5.4	22	4×5.4	20	4×5.4	18
													5×5.4	25
10							4×5.4	26	4×5.4	24	4×5.4	24	5×5.4	30
									5×5.4	32	5×5.4	34	6.3×5.4	40
22			4×5.4	31	4×5.4	30	4×5.4	30	5×5.4	38	5×5.4	39	6.3×5.4	71
					5×5.4	39	5×5.4	44	6.3×5.4	55	6.3×5.4	59		
33	4×5.4	32	4×5.4	31	4×5.4	34	5×5.4	44	5×5.4	46	6.3×5.4	65	6.3×7.7	94
			5×5.4	44	5×5.4	48	6.3×5.4	63	6.3×5.4	67				
47	4×5.4	32	4×5.4	40	4×5.4	35	5×5.4	52	6.3×5.4	70	6.3×5.4	70	6.3×7.7	105
			5×5.4	52	5×5.4	48	6.3×5.4	75			6.3×7.7	94	8×10.5	140
100	5×5.4	60	5×5.4	55	5×5.4	54	6.3×5.4	103	6.3×7.7	143	6.3×7.7	132	8×10.5	200
			6.3×5.4	89	6.3×5.4	90	6.3×7.7	110			8×10.5	175	10×10.5	250
150	6.3×5.4	100	6.3×5.4	95	6.3×5.4	90	6.3×7.7	130	8×10.5	210	8×10.5	190	10×10.5	280
220	6.3×5.4	120	6.3×5.4	100	6.3×5.4	95	6.3×7.7	162	8×10.5	230	8×10.5	200	10×10.5	320
			6.3×7.7	170	6.3×7.7	173	8×10.5	280	10×10.5	310	10×10.5	310		
330	6.3×7.7	200	6.3×7.7	188	6.3×7.7	175	8×10.5	320	8×10.5	270	10×10.5	360	10×10.5	400
									10×10.5	340				
470	6.3×7.7	240	6.3×7.7	210		190	8×10.5	350	10×10.5	380	10×10.5	420	12.5×13.5	600
			8×10.5	330	6.3×7.7	390	10×10.5	420						
680	8×10.5	400	8×10.5	350	8×10.5	400	10×10.5	450	10×10.5	450	12.5×13.5	680	16×16.5	1000
					10×10.5	500								
1000	8×10.5	450	8×10.5		10×10.5	580	10×10.5	500	12.5×13.5	750	16×16.5	1100	18×16.5	1350
			10×10.5	370										
1500	10×10.5	750	10×10.5	700	12.5×13.5	790	12.5×13.5	850	16×16.5	1000	16×16.5	1200		
2200			12.5×13.5	890	12.5×13.5	890	16×16.5	1100	16×16.5	1100	18×16.5	1450		
3300			12.5×16.5	1000	16×16.5	1300	16×16.5	1300	18×16.5	1450	18×21.5	1750		
4700			16×16.5	1400	16×16.5	1400	18×16.5	1600	18×21.5	1750				
6800			18×16.5	1700	18×16.5	1700	18×21.5	2000						
10000			18×21.5	2000	18×21.5	2000								

V / μF	63		80		100		160		200		250		400	
	D×L mm	I~ mA	D×L mm	I~ mA	D×L mm	I~ mA	D×L mm	I~ mA	D×L mm	I~ mA	D×L mm	I~ mA	D×L mm	I~ mA
1.0	4×5.4	8	5×5.4	30	5×5.4	30	6.3×7.7	70	6.3×10.5	90	6.3×10.5	80	6.3×10.5	70
2.2	4×5.4	12	5×5.4	32	5×5.4	32	6.3×7.7	70	6.3×10.5	95	6.3×10.5	85	6.3×10.5	75
3.3	4×5.4	22	5×5.4	35	5×5.4	35	6.3×7.7	70	6.3×10.5	100	6.3×10.5	90	8×12.5	85
4.7	5×5.4	25	5×5.4	40	5×5.4	40	6.3×7.7	75	8×10.5	120	8×12.5	100	8×12.5	85
6.8	6.3×5.4	30	6.3×5.4	60	6.3×5.4	60	6.3×7.7	80	8×10.5	120	8×12.5	100	10×12.5	95
10	6.3×5.4	40	6.3×5.4	60	6.3×7.7	70	8×10.5	90	10×10.5	150	10×12.5	120	10×12.5	95
22	6.3×7.7	45	6.3×7.7	70	8×10.5	90	10×12.5	180	10×10.5	150	10×12.5	120	10×12.5	95
33	8×10.5	139	8×10.5	139	8×10.5	90	12.5×13.5	290	12.5×16.5	310	12.5×16.5	240	16×16.5	140
47	8×10.5	139	8×10.5	139	10×10.5	160	12.5×16.5	370	16×16.5	420	16×16.5	340	18×16.5	280
68	10×10.5	160	10×10.5	160	12.5×13.5	380	16×16.5	500	16×16.5	420	16×16.5	340	18×21.5	350
100	10×10.5	226	10×10.5	226	12.5×13.5	400	18×16.5	650	16×21.5	590	18×21.5	490		
150	10×12.5	300	10×12.5	300	12.5×16.5	500								
220	12.5×13.5	500	12.5×13.5	500	16×16.5	600								
330	12.5×16.5	600	12.5×16.5	600	18×16.5	780								
470	16×16.5	850	16×16.5	850	18×21.5	850								
680	18×16.5	1100	18×16.5	1100										
1000	18×21.5	1400	18×21.5	1400										

I~=Rated ripple current (mA) (85℃, 120Hz)

Tests

<table>
<tr><td>1</td><td>SERIES</td><td>HVS SERIES</td></tr>
<tr><td>2</td><td>Rated voltage</td><td>4V ~ 400V</td></tr>
<tr><td>3</td><td>Operating temperature range operating</td><td>Operating temperature range is the range of ambient temperature at which the capacitor can be operated continuously at rated voltage
SPEC:-40~+85℃</td></tr>
<tr><td rowspan="5">4</td><td rowspan="5">Capacitance</td><td colspan="2">Measuring circuit equivalent series circuit</td></tr>
<tr><td>20℃</td><td>measuring temperature</td></tr>
<tr><td>120HZ</td><td>measuring frequency</td></tr>
<tr><td>0.5Vrms</td><td>measuring voltage</td></tr>
<tr><td>±20% MAX</td><td>Nominal Capacitance Tolerance:±20% MAX</td></tr>
<tr><td>5</td><td>Tangent of the loss angle</td><td>Measurement should be made under the same conditions as those given for the measurement of capacitance
SPEC：
<table>
<tr><td rowspan="2">（tgδ）</td><td>UR (V)</td><td>4</td><td>6.3</td><td>10</td><td>16</td><td>25</td><td>35</td><td>50</td></tr>
<tr><td>tgδ</td><td>0.35</td><td>0.28</td><td>0.24</td><td>0.20</td><td>0.16</td><td>0.14</td><td>0.12</td></tr>
</table></td></tr>
<tr><td>6</td><td>Leakage current</td><td>The rated voltage shall be applied across the capacitor and its protective resistor which shall be 1000±100Ω.The leakage current shall be then measured after an electrifications period of (A)min. The leakage current shall be calculated by the following equation
I≤0.01CV or 3μA Which is greater（20℃，2 ）
SPEC: The following specifications shall be satisfied when the rated voltage is applied for the required time.</td></tr>
<tr><td>7</td><td>Maximum permissible ripple current</td><td>The maximum sinusoidal alternating current of a frequency specified below, at which the capacitor can be operated continuously. This requirement shall be satisfied even after the measurement of clause 16(electrical endurance) Where(DC voltage +peak ripple voltage)≤rated voltage.</td></tr>
</table>

8 Characteristics of temperature

Step	temperature	Duration
1	20±2℃	15 min
2	minimum operating temperature	2hours
3	20±2℃	15 min
4	maximum operating temperature	2 hours

Step1：Capacitance, tangent of the loss angle impedance shall be measured.

Step2：After the capacitor being stored for 2hours, Capacitance, tangent of the loss angle and impedance shall be measured.

Step3：The capacitor being stored fro 15min at20±2℃.

Step4：After the capacitor being stored for 2hours, capacitance and leakage current shall be measured.

Rated voltage		4	6.3	10	16	25	35	50
Z-(-25℃/Z(+20℃)	〈Φ8	7	4	3	2	2	2	2
	≥Φ8	7	5	4	3	2	2	2
Z-(-40℃/Z(+20℃)	〈Φ8	15	8	8	4	4	3	3
	≥Φ8	15	10	8	6	4	3	3

9 Surge test

The capacitor shall be subjected to 1000cycles at a temperature specified below, each consisting of a charge period of 30±5sec, followed by a discharge period of approx. 5min30sec. And the capacitor shall be stored under standard conditions thermal to obtain stability,after which measurements shall be made.

measurement circuit

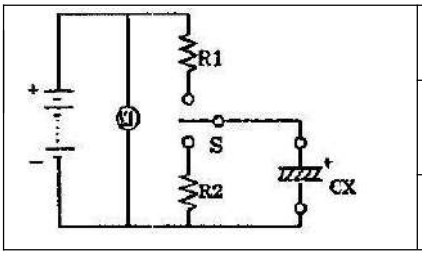

VS:Surge voltage	V1:DC voltmeter
R1: Protective series resistor （1KΩ）	R2:Discharge resistor
CX: Test capacitor	S:Switch

RATED VOLTAGE(VDC)	4	6.3	10	16	25	35	50
SURGE VOLTAGE(VDC)	5	8	13	20	32	44	63

10 Terminal strength

1) Tensile

d(mm)	[N]	Duration time
0.3<d≤0.5	5	10±2sec
0.5<d≤0.8	10	
0.8<d≤1.25	20	

2）Bending

The terminal shall be subjected to 1 bend in each direction to give a total 2 bends.

d(mm)	[N]
0.3<d≤0.5	2.5 (0.25KG)
0.5<d≤0.8	5.0 (0.51KG)
0.8<d≤1.25	10.0(1.0KG)

SPEC: No breaking and loosening of terminal

11	Solderability	Solder ：H60A. H60S or H63A (Solder temperature）：245±2℃ (Immersion time）：3±0.5sec (Immersion depth）：2mm Flux：25％ by weight of rosin in ethanol SPEC:1) 3/4 of the circumference of the surface up to the immersed shall be covered with new solder.
12	Resistance to soldering heat	(Solder）：H60A. H60S or H63A (Solder temperature）：260±5℃(or 350±10℃(Immersion time）：10±1sec（or 3.5±0.5sec） （Thickness of heat shunt:1.6mm）：1.6mm SPEC:1) Change in capacitance: ±10% Within±10% of the initial value; 2）tangent of the loss angle：The initial specified value or less; 3）leakage current：The initial specified value or less.
13	Vibration	Only endurance conditioning by sweeping shall be made. The entire frequency range, from 10 to 55Hz and return to 10Hz, shall be transversed in 1min. Amplitude (total excursion) 1.5mm, This motion shall be applied for a period of 2hours in each of 3 muturally perpendicular directions(atotal of 6 hours) SPEC:1) change in capacitance: within ±5%of the initial value; 2) No visible damage.
14	Damp heat	The capacitor shall be stored at a temperature of 40±2℃ and relative huidity of 90 to 95% for 240 ±8hours . And then the capacitor shall be subjected to standard atmospheric conditions for 1 to 2hours, after which measurements shall be made. SPEC:1) change in capacitance：within ±15%of the initial value； 2) tangent of loss angle：The initial specified value or less； 3) leakage current：The initial specified value or less.
15	Shelf life	The capacitor shall be stored at 85℃ temperature specified below for 1000hours. During which time no voltage shall be applied. And then the capacitor shall be sujected to standard atmospheic conditions for 1 to 2hours, after which measurements shall be made, Prior to the measurement of leakage current, following conditioning may be made. SPEC:1) change in capacitance：within ±20% of the initial value； 2) tangent of loss angle：within ±200% of the initial value； 3）leakage current：The initial specified value or less.
16	Load life	The rated voltage shall be applied continuously to the capacitor at maximum operating temperature 85 ±2℃ for 1000 hours. And then the capacitor shall be subjected to standard atmospheric conditions for 1to 2hours, after which measurement shall be made. SPEC:1) change in capacitance：within ±20%of the initial value； 2) tangent of loss angle：within ±200%of the initial value； 3) leakage current：The initial specified value or less.

HVS - Chip Type Aluminum Electrolytic Capacitors

Carrier tape

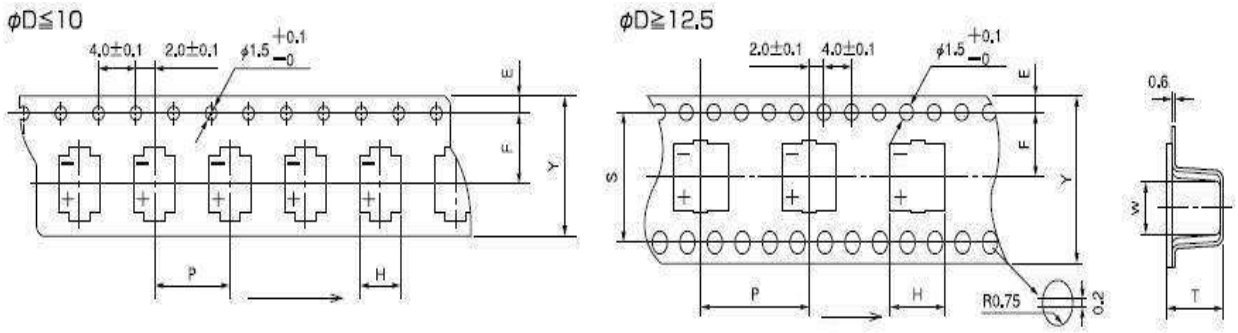

unit:(mm)

ΦD×L	4×5.4	5×5.4	6.3×5.4	6.3×7.7	6.3×10.5	8×10.5	8×12.5	10×10.5	10×12.5	12.5×13.5	12.5×16.5	16×16.5	18×16.5	18×21.5
W	12.0	12.0	16.0	16.0	16.0	24.0	24.0	24.0	24.0	32.0	32.0	44.0	44.0	44.0
P	8.0	12.0	12.0	12.0	12.0	16.0	16.0	16.0	16.0	24.0	24.0	28.0	32.0	32.0
F	5.5	5.5	7.5	7.5	7.5	11.5	11.5	11.5	11.5	14.2	14.2	20.2	20.2	20.2
A0	5.0	6.0	7.0	7.0	7.0	8.7	8.7	10.7	10.7	13.2	13.2	17.5	19.5	19.5
B0	5.0	6.0	7.0	7.0	7.0	8.7	8.7	10.7	10.7	13.2	13.2	17.5	19.5	19.5
T2	5.8	5.8	5.8	8.0	11.0	11.0	13.3	11.0	13.3	14.3	17.3	17.3	17.8	22.5

Reel

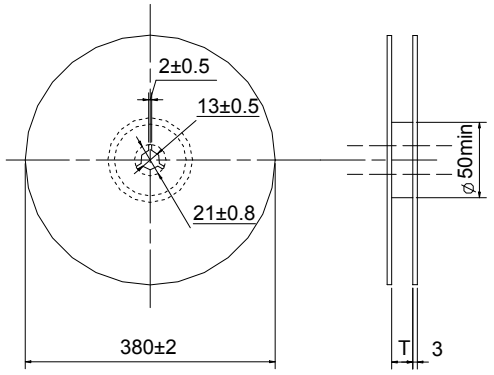

unit:(mm)

ΦD	4	5	6.3 (8×6.5)	8	10	12.5	16	18
T	14	14	18	26	26	34	46	46

Package quantity

ΦD×L	Quantity / Reel	pcs/ Small packing box	pcs/Large packing box
4×5.4	2000pcs	24000pcs	48000pcs
5×5.4	1000pcs	12000pcs	24000pcs
6.3×5.4、6.3×7.7、8×6.5	1000pcs	10000pcs	20000pcs
8×10.5、10×10.5	500pcs	3500pcs	7000pcs
6.3×10.5	800pcs	8000pcs	16000pcs
8×12.5	400pcs	2800pcs	5600pcs
10×12.5	400pcs	2800pcs	5600pcs
12.5×13.5	250pcs	2500pcs	5000pcs
12.5×16.5	200pcs	800pcs	1600pcs
16×16.5	200pcs	800pcs	1600pcs
18×16.5	175pcs	700pcs	1400pcs
18×21.5	125pcs	500pcs	1000pcs